Spring Couplings for 2RMHF-SSI

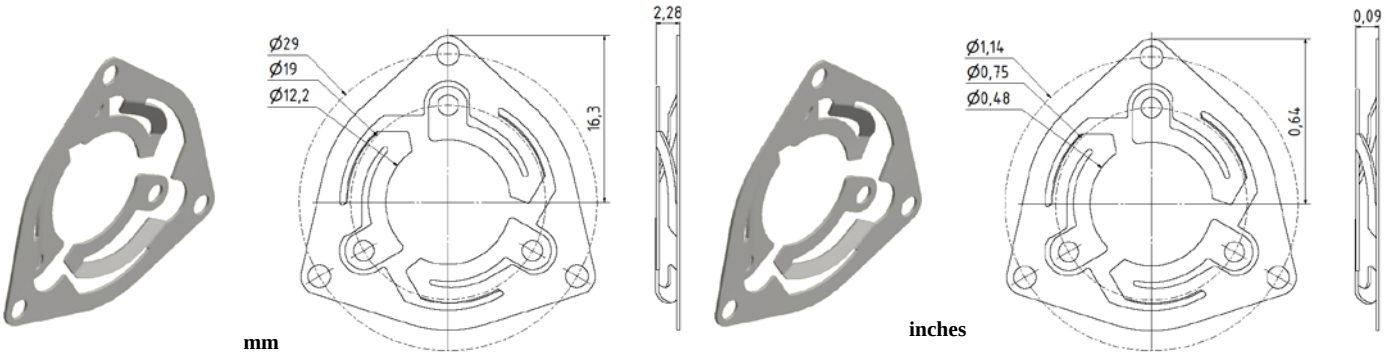

mm

inches

Part No. 80139791
Material: Stainlees steel

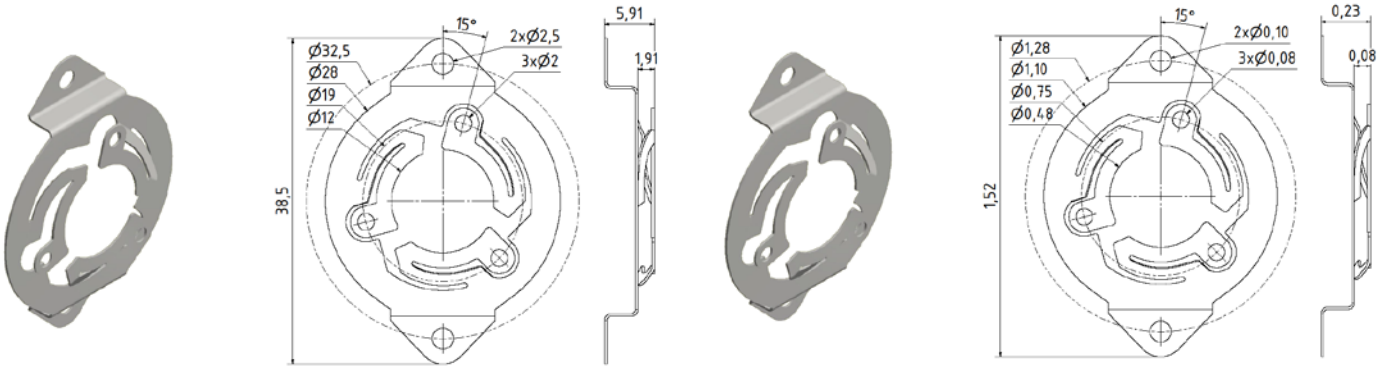

mm

Part No. 80140700
Material: Stainlees steel

inches

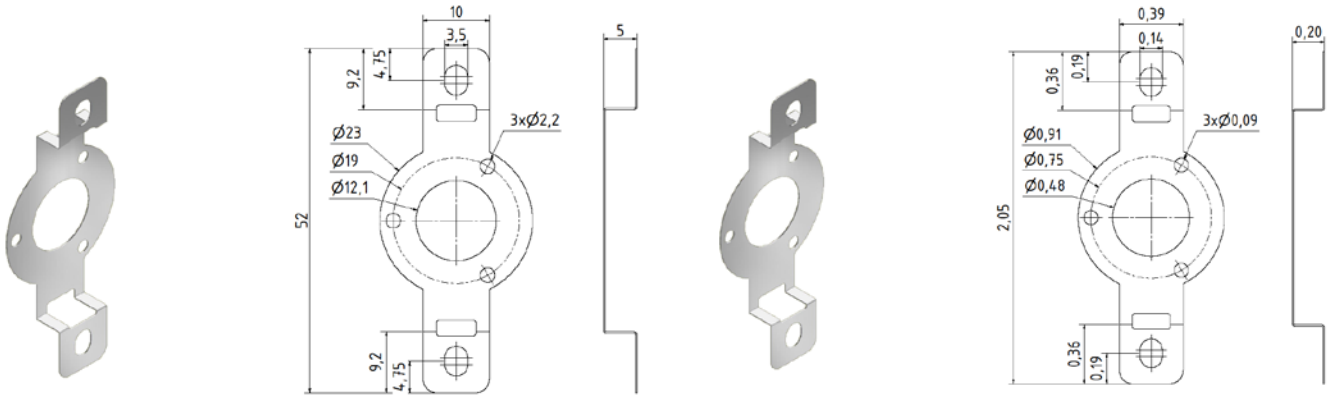

mm

Part No. 80149578
Material: Stainlees steel

inches

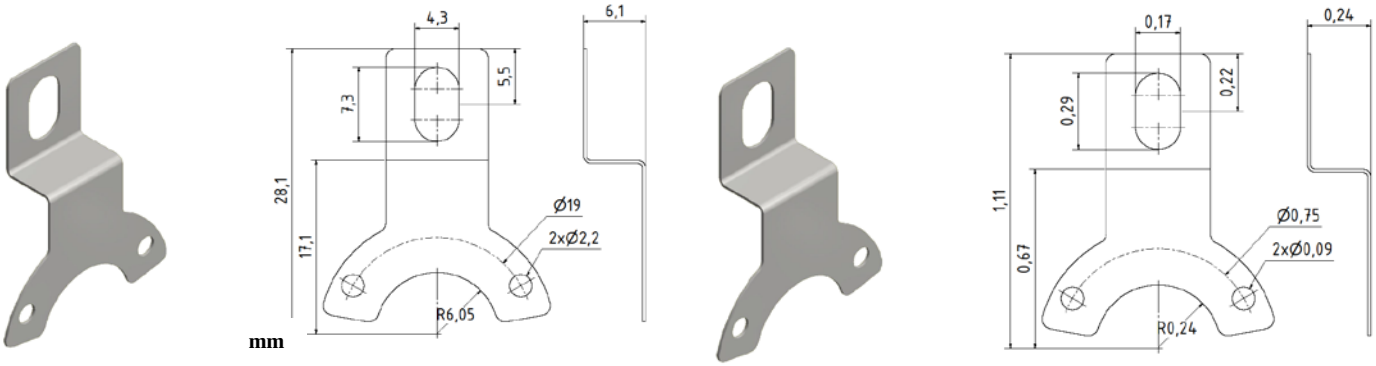

mm

Part No. 80140482
Material: Stainlees steel

inches