

Type SCH88BEX – SSI

- Hollow Shaft Encoder – ø 89 mm (ø 3.46 in.)
- Through Hollow Shaft: ø 25 mm to ø 30 mm (1.18 in.)
- IP 66/67/68 (~ Nema 6) Environmental Protection
- Aluminum (Chromital TCP surface treatment)
- Material option Stainless Steel *(AISI 316)*
- ATEX, IECEx, Russian and North American Class I Div. 1 certifications

Electrical Specifications

Encoder Type:	Absolute Multiturn
Interface:	SSI (Synchronous Serial Interface). RS422 Data Out driver. Optocoupler Clock In receiver
Output Code:	Binary or Gray
Clock Frequency	100 kHz to 2 MHz
Termination Resistor:	Built in termination resistor of 120Ω on clock input.
Resolution:	Max. 15 bits (32768) revolutions Max. 16 bits (65536) steps per rev.
Counting Direction:	Increasing clockwise or increasing counterclockwise seen from the face side of the encoder.
Supply Voltage	9 VDC min. to 30 VDC max.
Current Consumption	80 mA @ Vsup = 10 V (typical) 40mA @ Vsup = 24 V (typical)
Power Consumption	< 1.2 Watt
Electrical Protection:	Reverse polarity and output short circuit protected
Noise Immunity and Emission:	Tested to EN61000-6-2 : 2019 (industrial environments) and EN 61000-6-3 : 2007 (residential, commercial, and light-industrial environments).

Mechanical Specifications

Material:	Housing: Aluminum or Stainless Steel Cap: Aluminum or Stainless Steel Hollow Shaft: Stainless Steel
Weight:	Aluminum: ~ 2400 gr (84.65oz) Stainless Steel: ~ 5500 gr (194 oz)
Bearing Life:	> 1,9 x 10^{10} revolutions at rated load
Hollow Shaft Speed:	3.000 rpm continuous (max.) IP 67
Starting Torque:	< 0,1 Nm (142 oz-in) at 25° C
Mass Moment of Inertia:	180g-cm² (25,5 * 10^{-3} oz-in²)
Shaft Loads:	Axial: 250 N (56 lbs) max. Radial: 500 N (112 lbs) max.
Shock:	100 g @ 11 ms
Vibration:	10 g @ 10-2000 Hz
Bump:	10 g @ 16 ms (1000 x 3 axis)

Environmental Specifications

Operating Temp.:	-40° to +70° C
Storage Temp.:	-40° to +85° C
Humidity:	98 % RH without condensation
Enclosure Rating:	IP 66 / Nema 6 (approx.) IP 67 / Nema 6 (approx.) IP 68 / Nema 6P (approx.) 1 meter/1 hour

Certifications

ATEX:	Certificate number: QPS 24ATEX5009X Certificate number: CML 19ATEX1099X ***(not valid for the cover EC03 with outlets on sides)*** II 2 G Ex db IIC T5 Gb, II 2 D Ex tb IIIC T100˚C Db, -40°C ≤ Tamb. ≤ +70°C
IECEx:	Certificate number: IECEx QPS 19.0003X Ex db IIC T5 Gb, Ex tb IIIC T100˚C Db, -40°C ≤ Tamb. ≤ +70°C
North America:	Certificate number: LR1192-6 Class I, Division 1, Groups CD T5; Class I, Division 2, Groups BCD T5; Class II, Division 1, Groups EFG; Class II, Division 2, Groups FG, Ex db IIC T5 Gb, Ex tb IIIC T100˚C Db; Class I Zone 1, AEx db IIC T5 Gb; Zone 21, AEx tb IIIC T100˚C Db; Tamb= -40 ˚C to +70 ˚C

Input/Output Terminations in removable end cap

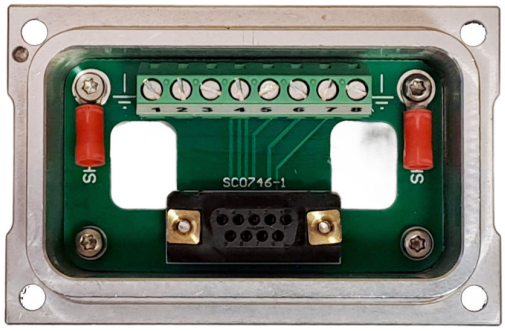

Terminal Block	
Terminal	**Function**
1	Circuit Ground (GND)
2	Supply Voltage – 9 to 30VDC
3	Complement Input (direction)
4	Preset Input
5	Clock+ Clock Input
6	Clock- Inverted Clock Input
7	Data- Inverted Data output
8	Data+ Data Output

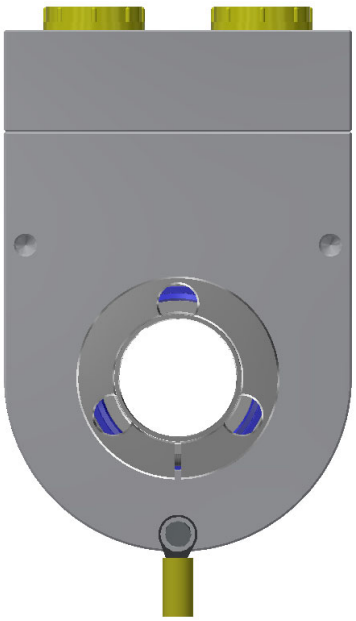

Connect cable shield to red cable shoe(s) – see below:

- Access to termination after end cap has been removed.
- **The internal earth connection** (red cable shoes) is 22-16 AWG.
  La connexion à la terre interne (Borne rouge) est en 22-16 AWG.
- **The terminal block** is intended for installation a cable with wire size:
  a) solid 0,14 mm2 – 2,5 mm2.
  b) flexible 0,14 mm2 - 1,5 mm2
  c) stranded with ferrule 0,25 mm2 - 1,5 mm2.

  The rated wire size is AWG 26-14.
- ***Le bornier*** *est conçu pour une installation d'un câble à la taille du fil:*
  a) rigid de 0,14 mm2 - 2,5 mm2
  b) flexible 0,14 mm2 - 1,5 mm2
  c) souple avec embout 0,25 mm2 - 1,5 mm2.

  La taille de fil nominale est AWG 26-16.
- **The external earth connection (yellow cable shoe) is 12-10 AWG.**
  La connexion de terre externe (Borne jaune) est en 12-10 AWG.

Mechanical Dimensions

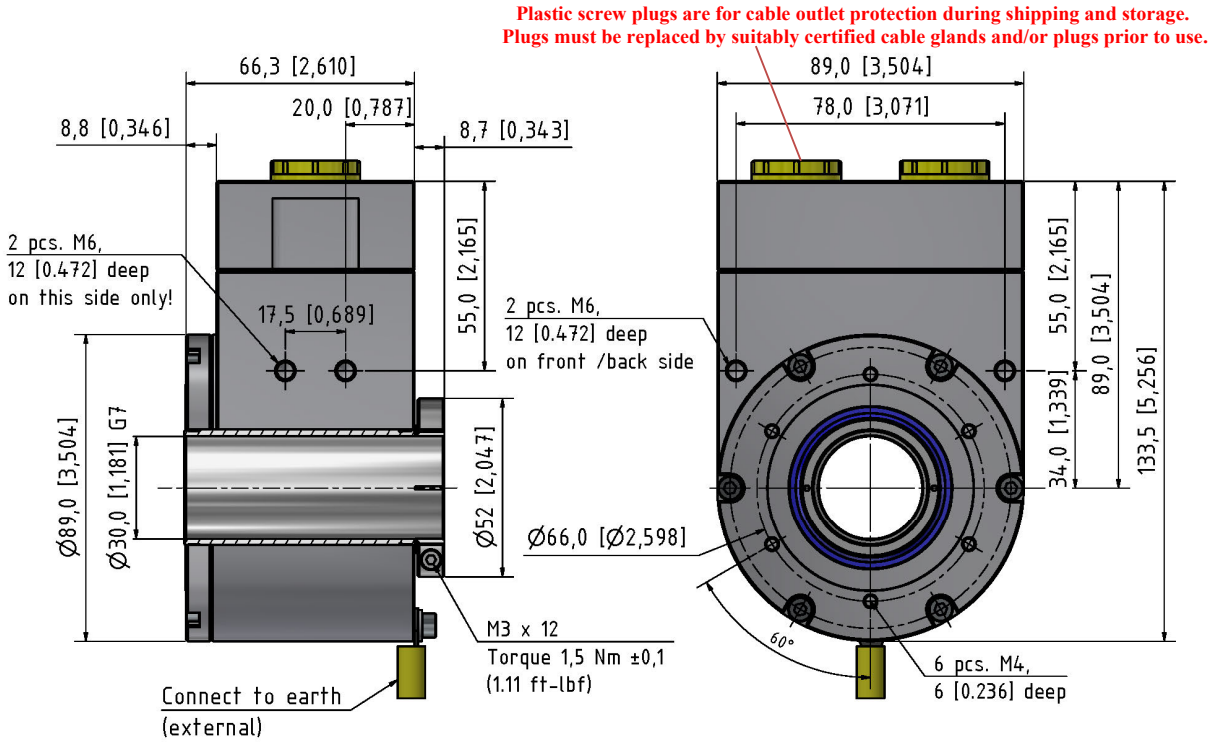

Standard End Cap Type EC02 mm (inches)

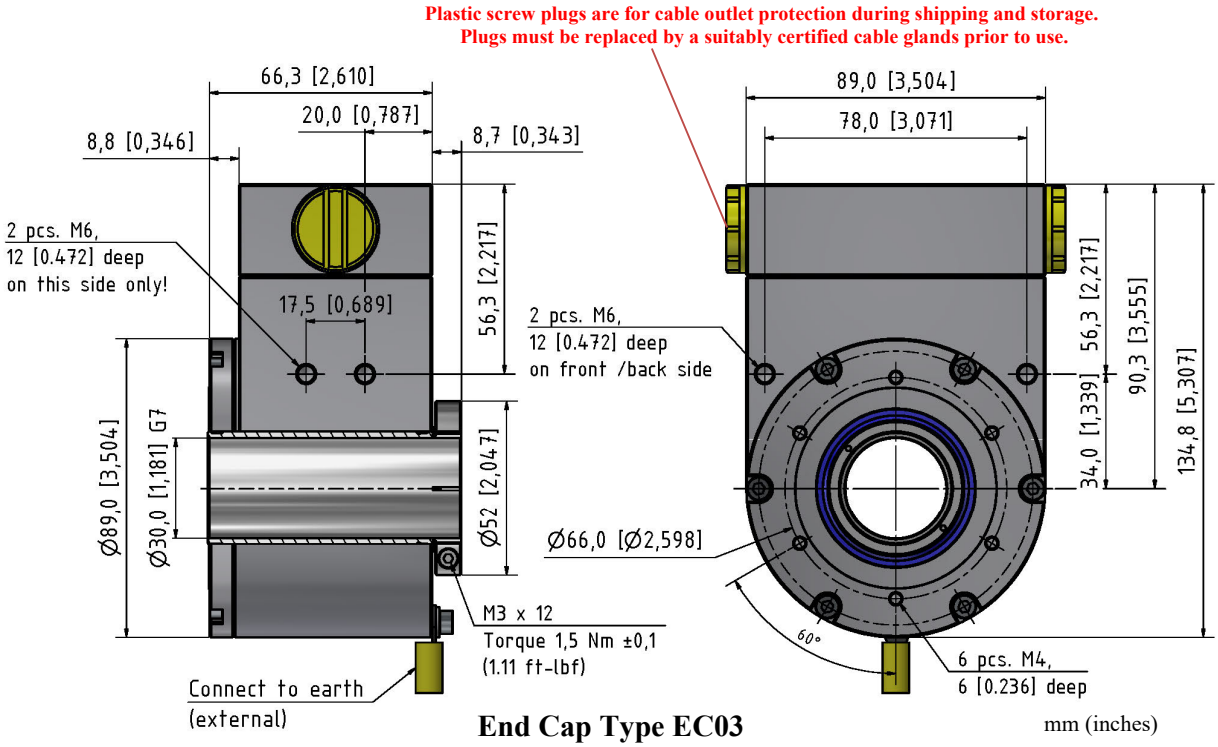

End Cap Type EC03 mm (inches)

SSI Interface Timing

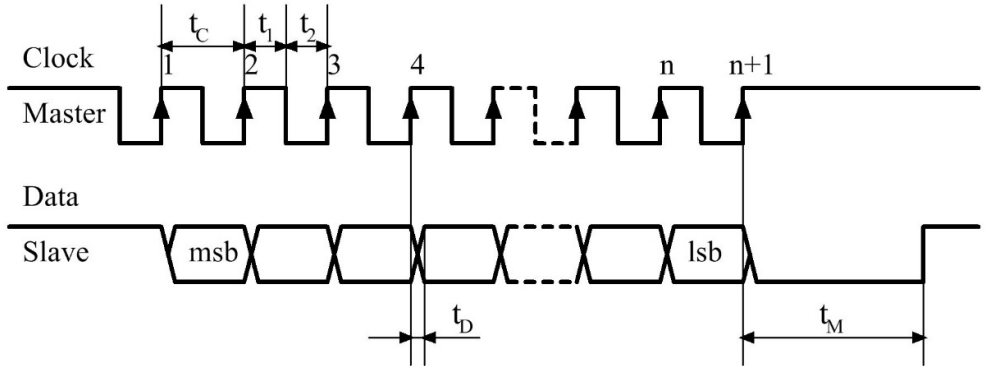

msb = Most Significant Bit

lsb = Least Significant Bit

n = Total Number of Bits

t_C = Clock Period = 10 to 0.5 µSec (100 kHz to 2 MHz)

t_1 = Clock High = 50% ±15% of Clock Period

t_2 = Clock Low = 50% ±15% of Clock Period

t_D = Clock to Data Valid = Max. 75 nSec

t_M = Monoflop Time = 20 ±5 µSec

Implementation

It is possible to set the direction of rotation and preset the encoder to zero. Both functions can be used actively during operation, but it is recommended that the encoder is at a standstill when a function is used/changed.

Setting of Direction.

The connection designated “Complement” is used to set the direction of rotation. Notice, that the encoder changes the direction “on the fly” as it, after a direction change, will continue from the same position as it was on when the direction was changed. Direction of rotation is viewed from the face side of the encoder (opposite to the shaft fixing clamp).

Voltage Level on Input	Function
High: Vsup or 0.8×Vsup ≤ Vin ≤ Vsup	Encoder Increasing on Counterclockwise Rotation
Low: Not connected or 0V ≤ Vin ≤ 0.6×Vsup	Encoder Increasing on Clockwise Rotation

Preset to Zero

The connection designated “Preset” is used to preset the encoder to zero.

Voltage Level on Input	Function
High: Vsup or 0.8×Vsup ≤ Vin ≤ Vsup	Encoder Value is set to Zero
Low: Not connected or 0V ≤ Vin ≤ 0.6×Vsup	Inactive

The encoder will be held at zero as long as the input is high. The input must be high for at least 10 mSec. for the preset to take effect. The new zero point will be stored permanently in the encoder.

Ordering Code

Example: SCH88BEX-1SS– 12-13 – AL – B– 03 – 00 – 67 – EC02 – A

SCH88BEX-1SS	-		-		-		-		-		-		-		-	
		1		2		3		4		5		**00**		6		7		**A** 8

1. Revolutions

Singleturn ……**00**
Multiturn *12 bits (4096)* …... **12**
Multiturn *14 bits (16384)*..... **14**
Multiturn *15 bits (32468)*..... **15**

2. Resolution

12 Bits *(4096 steps; 0,09°)* …..**12**
13 Bits *(8192 steps; 0,04°)* …..**13**
16 Bits *(65536 steps; 0,005°)*..**16**

3. Composition

Aluminum ….....… **AL**
Stainless Steel* ..... **SA**

**AISI 316*

4. Output Code

Binary ……..…….. **B**
Gray ……..……..**G**

5. Hollow Shaft *(diameter)*

25 mm …..……**01**
1 inch …….....**02**
30 mm ……..…...**03**

6. IP Rating

IP 66 ……..…….... **66**
IP 67 ……..…… **67**
IP 68*……..…… **68**

*1 meter/1hour

7. End Cap

2 x M20x1,5 *radial*.... **EC02**
2 x M20x1,5 *sides*..... **EC03**

8. Flange

A….…… **A**

See **Accessories** *for Anti-rotation devices (Springs/Torque Arms) and mounting examples.*